TSCI-1200CR-SLG-M-WW-1A

True Scientific – 1204 Liters (42.5 Cu Ft) Capacity • Chromatography Unit • Refrigerator – Slide Glass – Multi Door – White Exterior • White Interior – 115 Voltage • Revision A

Project Name	Location	Item #	Quantity	Model #	AIA #	SIS #

PERFORMANCE SPECIFICATIONS

Usable Capacity (cu. ft.) (Liters)	42.5	1204
Temperature Range (min - max)	2°C	10°C
Temperature Set Point	5°C	
Temperature Uniformity	0.7°C	
Temperature Stability	1.7°C	
Energy Star Certified	Yes	
NSF 456 Certified	Yes[1]	
Energy Usage (kWh)	3.812	
Daily Rejected Heat (BTU/Hr)	1155	

DIMENSIONS & CONSTRUCTION

External Dimensions W** x D† x H (in.) (mm)	54 ⅛ x 29 ¾ x 81 ¾ (1375 x 756 x 2076)	
Number of Doors	2	
Door Type / Swing or Slide	Glass	Slide
Number of Shelves / Type of Shelves	14 Full	
Shelf Dimensions (W x D in.) / Shelf Capacity (lbs.)	Full Shelf	
	24 ⅜ x 21 ⅛	92
Probe Port(s) / Diameter (in.)	1	0.625
Access Port(s) / Diameter (in.)	2	2
Internal Outlet	Duplex Outlet 12A Max	
Castors or Leg Levelers	2.5 in. Castors	
Crated Weight (lbs) (kg)	550	249
Refrigerant	R290	

ELECTRICAL DATA

Voltage / Frequency	115V	60Hz
Amperage	2.8A	
Plug Type	NEMA 5-15P	

Specifications subject to change without notice. Chart dimensions rounded up to the nearest ⅛" (millimeters rounded up to next whole number).

[1] Meets NSF 456 performance standards; calibrated probe currently not offered.

**Width does not include ⅞" (23mm) each side for access ports.

† Depth does not include ⅝" (16mm) for rear system mechanical components.

FEATURES

- Expertly designed air circulation and refrigeration systems ensure temperature stability and uniformity throughout the cabinet, meeting CDC guidelines and eliminating hot and cold spots that could put your contents at risk.
- Adjustable perforated and non-peel white coated steel shelves, ideal for storing large containers as well as vials and tubes.
- True Scientific products use R290, a natural refrigerant that is future-proof and sets sustainability standards while providing increased efficiency and reduced operating cost.
- Reliability you can count on with best-in-class warranty – 3 year labor, 5 year parts, 7 year compressor warranty
- Self-Cleaning condenser technology reduces the need for cleaning the condensing coil, reduces energy consumption, and helps maintain the tightest temperatures.
- Battery backed-up digital display of current temperature with alarms for high/low temp, power failure, sensor failure and door ajar.
- Simulated Temperature Monitoring measured in a glycol-filled bottle to simulate actual product temperature.
- Chromatography models have a temperature probe port in the rear of the unit, 2 inch access ports on either side, and an internal duplex outlet.

APPROVALS	AVAILABLE AT

TSCI-1200CR-SLG-M-WW-1A

True Scientific – 1204 Liters (42.5 Cu Ft) Capacity • Chromatography Unit • Refrigerator – Slide Glass – Multi Door – White Exterior • White Interior – 115 Voltage • Revision A

STANDARD FEATURES

Refrigeration System

- Refrigeration system specifically designed to maintain cabinet temperatures between 2°C - 10°C (36°F - 50°F).
- Expertly designed airflow system controls temperature uniformity throughout the cabinet within +/- 1°C.
- Self-contained, capillary tube system using environmentally friendly R290 hydrocarbon refrigerant that has zero (0) ozone depletion potential (ODP), & 0.02 global warming potential (GWP).
- Reciprocating hermetic compressor paired with forced air copper tube, aluminum fin condenser.
- Automatic defrost.
- State-of-the-art, electronically communicated evaporator and condensing fan motors. Produces less heat, reduces energy consumption, and provides more efficient airflow.
- Operating conditions: Maximum relative humidity 60% for temperatures from 15°C - 32°C (59°F - 90°F).
- Indoor use only
- CDC compliant

Cabinet Construction

- **Exterior** - non-peel or chip white powder coated cold rolled steel; durable and permanent. White aluminum back.
- **Interior** - attractive, white aluminum interior liner with a stainless steel floor.
- **Insulation** - entire cabinet structure is foamed-in-place using a high density polyurethane insulation that has zero ozone depletion potential (ODP) and zero global warming potential (GWP).
- 0.625 Inch diameter probe access port in the back of the unit.
- LED interior lighting, provides more even lighting throughout the cabinet.
- Remote alarm contacts

Shelving

- Powder-coated, perforated sheet metal shelves adjustable in 1/2 inch (13 mm) increments. 7 shelves total.
- Four (4) stainless steel shelf clips are included per shelf.

Door

- Low-E, double pane thermal insulated glass door assemblies with mitered plastic channel frames. The latest in energy efficient technology.
- Each door fitted with 12" (305 mm) long handle.
- Smooth, consistent, self closing doors.
- Door ajar alarm

Electrical

- Unit completely pre-wired at factory and ready for final connection to a 115/60/1 phase, 15 amp dedicated outlet. Cord and plug set included.

Optional Features/Accessories (upcharge and lead times may apply)

- Stainless steel interior
- Stainless steel exterior
- Additional perforated sheet metal shelves
- Wire shelves
- 6" standard legs
- 6" seismic legs

UNIFORMITY & STABILITY

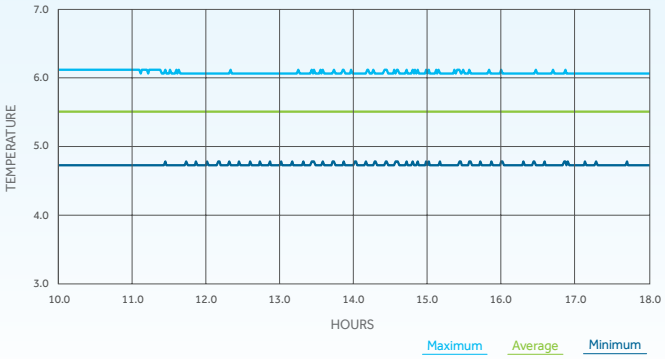

PLAN VIEW

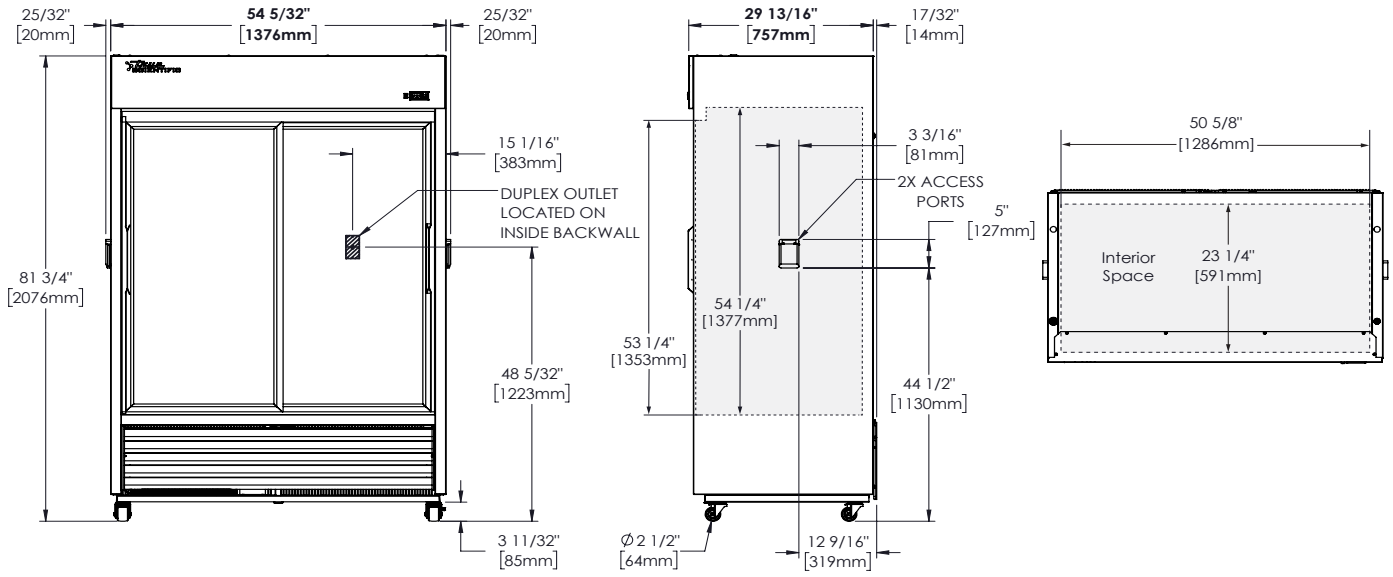

2001 East Terra Lane • O'Fallon, MO 63366-4434 • 636-240-2400 • Toll Free 800-325-6152 • Parts Dept. 800-424-True
truemfg.com