TRUE MANUFACTURING CO., INC.
U.S.A. FOODSERVICE DIVISION
2001 East Terra Lane • O'Fallon, Missouri 63366-4434 • (636)240-2400
Fax (636)272-2408 • Toll Free (800)325-6152 • Intl Fax# (001)636-272-7546
Parts Dept. (800)424-TRUE • Parts Dept. Fax# (636)272-9471 • www.truemfg.com

Project Name: _____
Location: _____
Item #: _____ *Qty:* _____
Model #: _____

AIA #
SIS #

Model:
TBB-24GAL-72G-S-HC-LD

Underbar Refrigeration:

Glass Swing Door Galvanized Top Stainless Steel 24" Back Bar Cooler with LED Lighting & Hydrocarbon Refrigerant

TBB-24GAL-72G-S-HC-LD

- True's refrigerated back bar coolers are designed with enduring quality and value. Our commitment to using the highest quality materials and oversized refrigeration assures colder product temperatures and years of trouble free service.
- Oversized, factory balanced, refrigeration system holds 33°F to 38°F (.5°C to 3.3°C).
- Exterior - stainless steel front and sides. Matching aluminum back. Galvanized steel top designed to slide under existing cabinetry.
- Interior - Stainless steel floor with ½" (13 mm) reinforced lip and heavy gauge galvanized steel walls.
- NSF/ANSI Standard 7 compliant for packaged and bottled product.
- Positive seal doors.
- "Low-E", double pane thermal glass door assemblies with extruded aluminum frames. The latest in energy efficient technology.
- LED interior lighting provides more even lighting throughout the cabinet. Safety shielded.
- Entire cabinet structure is foamed-in-place using a high density, polyurethane insulation that has zero ozone depletion potential (ODP) and zero global warming potential (GWP).

ROUGH-IN DATA

Specifications subject to change without notice.
Chart dimensions rounded up to the nearest ⅛" (millimeters rounded up to next whole number).

Model	Doors	Capacity		Shelves	Cabinet Dimensions (inches) (mm)			HP	Voltage	Amps	NEMA Config.	Cord Length (total ft.) (total m)	Crated Weight (lbs.) (kg)
		12 oz. Cans	½ Barrels		W	D†	H						
TBB-24GAL-72G-S-HC-LD	3	84 6-pks	3**	6	71⅞ 1826	24¼ 616	34¼ 870	¼ N/A	115/60/1	2.7 N/A	5-15P	7 2.13	435 198

† Depth does not include 1⅜" (35 mm) for door handles and 1" (26 mm) for rear bumpers.

MADE WITH INNOVATION IN THE USA · 7 YEAR COMPRESSOR WARRANTY USA and Canada · natural refrigerant

6/20 Printed in U.S.A.

APPROVALS:

AVAILABLE AT:

Model:

TBB-24GAL-72G-S-HC-LD

Underbar Refrigeration:

Glass Swing Door Galvanized Top Stainless Steel 24" Back Bar Cooler with LED Lighting & Hydrocarbon Refrigerant

STANDARD FEATURES

DESIGN

- True's refrigerated back bar coolers are designed with enduring quality and value. Our commitment to using the highest quality materials and oversized refrigeration assures colder product temperatures and years of trouble free service.

REFRIGERATION SYSTEM

- Factory engineered, self-contained, capillary tube system using environmentally friendly R290 hydrocarbon refrigerant that has zero (0) ozone depletion potential (ODP), & three (3) global warming potential (GWP).
- High capacity, factory balanced refrigeration system that maintains cabinet temperatures of 33°F to 38°F (.5°C to 3.3°C) for the best in food preservation.
- State of the art, electronically commutated evaporator and condenser fan motors. ECM motors operate at higher peak efficiencies and move a more consistent volume of air which produces less heat, reduces energy consumption and provides greater motor reliability.
- Condensing unit accessed from behind front grill, slides out for easy cleaning and maintenance.

CABINET CONSTRUCTION

- Exterior - stainless steel front and sides. Matching aluminum back. Galvanized steel top designed to slide under existing cabinetry.
- Interior - Stainless steel floor with ½" (13 mm) reinforced lip and heavy gauge galvanized steel walls.
- Door threshold protector prevents damage to cabinet from routine loading of product.
- Insulation - entire cabinet structure is foamed-in-place using a high density, polyurethane insulation that has zero ozone depletion potential (ODP) and zero global warming potential (GWP).
- Welded, heavy duty steel frame rail, black powder coated for corrosion protection.

DOORS

- "Low-E", double pane thermal insulated glass door assemblies with extruded aluminum frames. The latest in energy efficient technology.
- Each door fitted with 12" (305 mm) long handle.
- Positive seal doors.
- Magnetic door gaskets of one piece construction, removable without tools for ease of cleaning.
- Door locks standard.

SHELVING

- Six (6) adjustable, heavy duty, black PVC coated wire shelves. Two (2) right and two (2) left shelf dimensions are 19"L x 16¼"D (483 mm x 413 mm). Two (2) center door shelf dimensions are 19⅝"L x 16¼"D (499 mm x 413 mm). Four (4) chrome plated shelf clips included per shelf.
- Aluminum shelf support pilasters. Shelves are adjustable on ½" (13 mm) increments.

LIGHTING

- LED interior lighting provides more even lighting throughout the cabinet. Safety shielded.

MODEL FEATURES

- Evaporator is epoxy coated to eliminate the potential of corrosion.
- Designed to accommodate a variety of beer kegs. Depending on tapping kit used, ½ barrels may not fit.
- NSF/ANSI Standard 7 compliant for the storage and/or display of packaged or bottled product.

ELECTRICAL

- Unit completely pre-wired at factory and ready for final connection to a 115/60/1 phase, 15 amp dedicated outlet. Cord and plug set included.

115/60/1
NEMA-5-15R

OPTIONAL FEATURES/ACCESSORIES

Upcharge and lead times may apply.

- ❑ 6" (153 mm) standard legs.
- ❑ 6" (153 mm) seismic/flanged legs.
- ❑ 2½" (64 mm) diameter castors.
- ❑ 4" (102 mm) diameter castors.
- ❑ Additional shelves.

PLAN VIEW

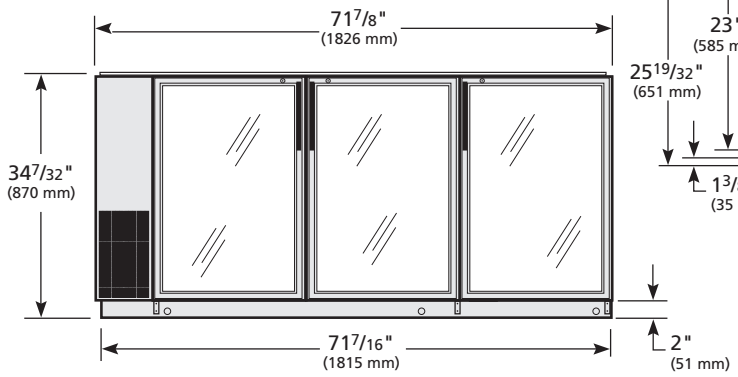

ELEVATION

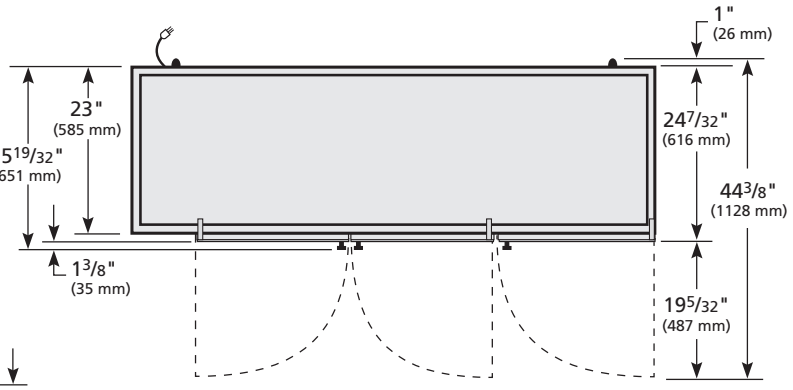

PLAN VIEW

METRIC DIMENSIONS ROUNDED UP TO THE NEAREST WHOLE MILLIMETER

SPECIFICATIONS SUBJECT TO CHANGE WITHOUT NOTICE

Model	Elevation	Right	Plan	3D	Back
TBB-24GAL-72G-S-HC-LD	TFJX66E	TFJX66S	TFJX66P	TFJX663	

TRUE MANUFACTURING CO., INC.

2001 East Terra Lane • O'Fallon, Missouri 63366-4434 • (636)240-2400 • Fax (636)272-2408 • Toll Free (800)325-6152 • Intl. Fax# (001)636-272-7546 • www.truemfg.com